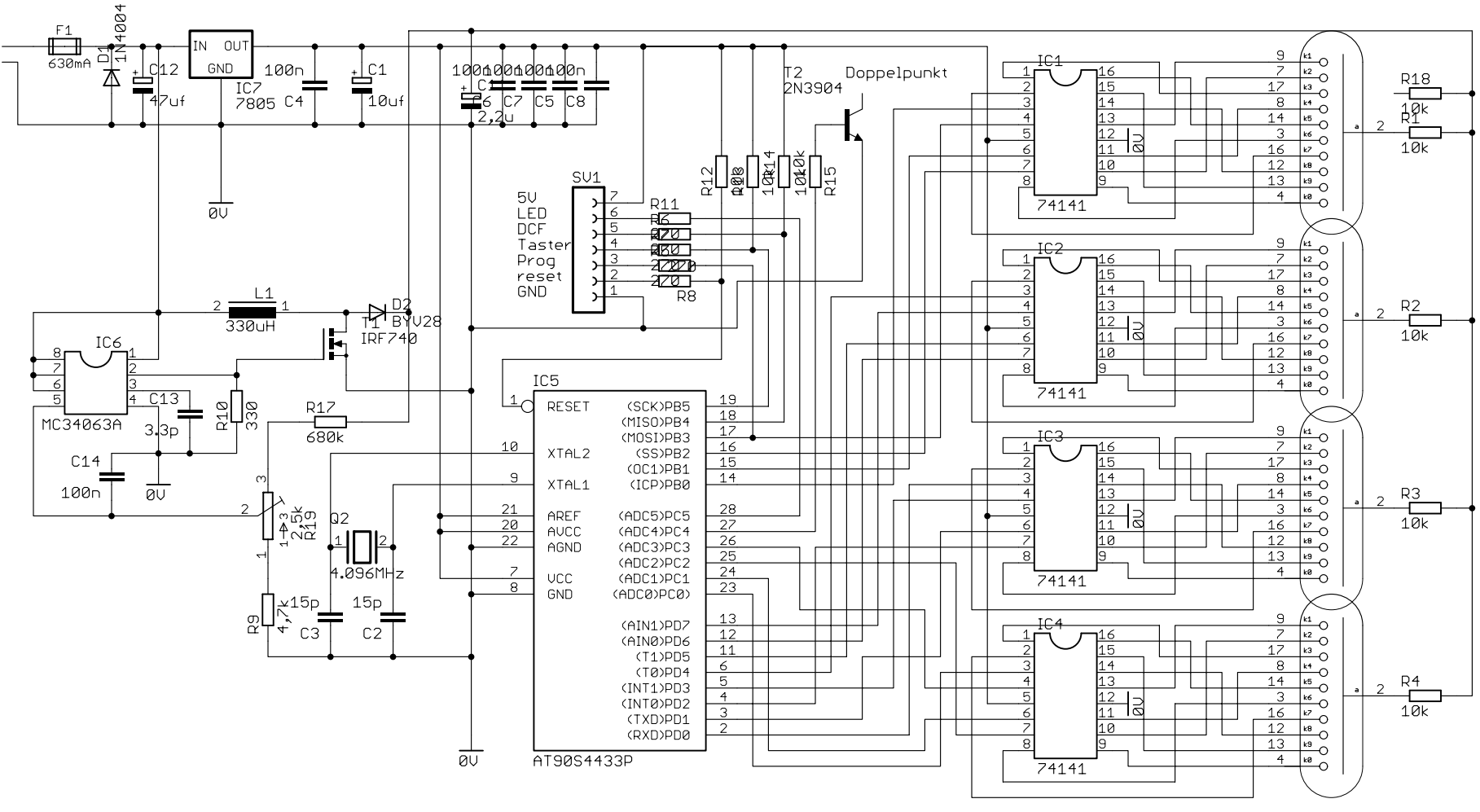
F1
630mA
D1
1N4004
C12
47uf
IN OUT
GND
IC7
7805
100n
C4
C1
10uf
100n
C6
2,2u
C7
100n
C5
100n
C8
0V
T2
2N3904
Doppelpunkt
SV1
5V
LED
DCF
Taster
Prog
reset
GND
R11
R8
R12
R13
R14
R15
IC1
IC2
IC3
IC4
74141
R18
R1
R2
R3
R4
10k
L1
330uH
D2
BYV28
T1
IRF740
IC6
MC34063A
C13
3,3p
R10
330
C14
100n
R17
680k
R19
25k
R9
4,7k
Q2
4.096MHz
15p
C3
15p
C2
IC5
RESET
XTAL2
XTAL1
AREF
AVCC
AGND
VCC
GND
(SCK)PB5
(MISO)PB4
(MOSI)PB3
(SS)PB2
(OC1)PB1
(ICP)PB0
(ADC5)PC5
(ADC4)PC4
(ADC3)PC3
(ADC2)PC2
(ADC1)PC1
(ADC0)PC0
(AIN1)PD7
(AIN0)PD6
(T1)PD5
(T0)PD4
(INT1)PD3
(INT0)PD2
(TXD)PD1
(RXD)PD0
AT90S4433P