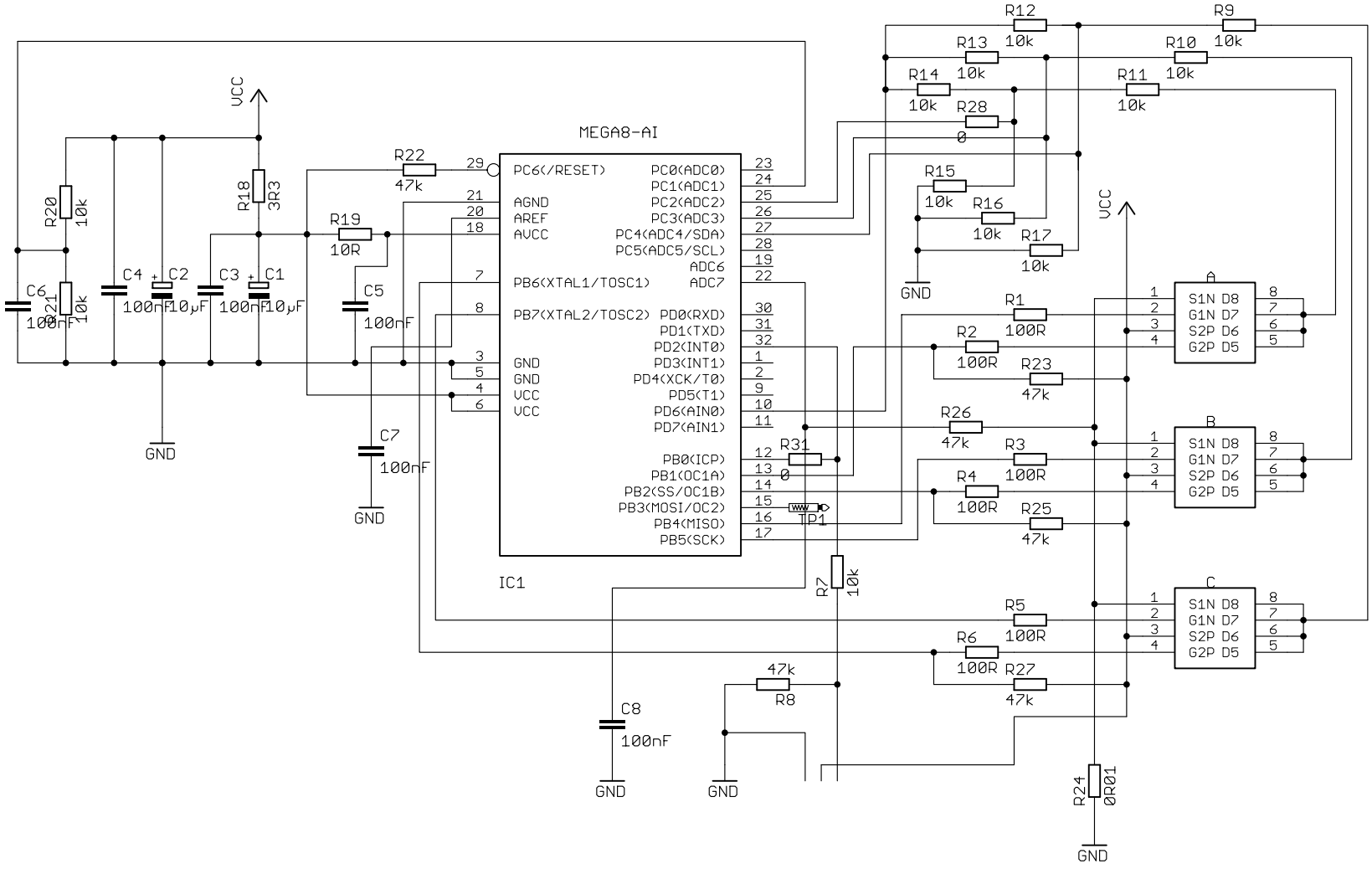

(c) B. Konze 2004/10/12

TITLE: FLEA

Document Number:

REV:

Date: 27.01.2005 08:38:24

Sheet: 1/1